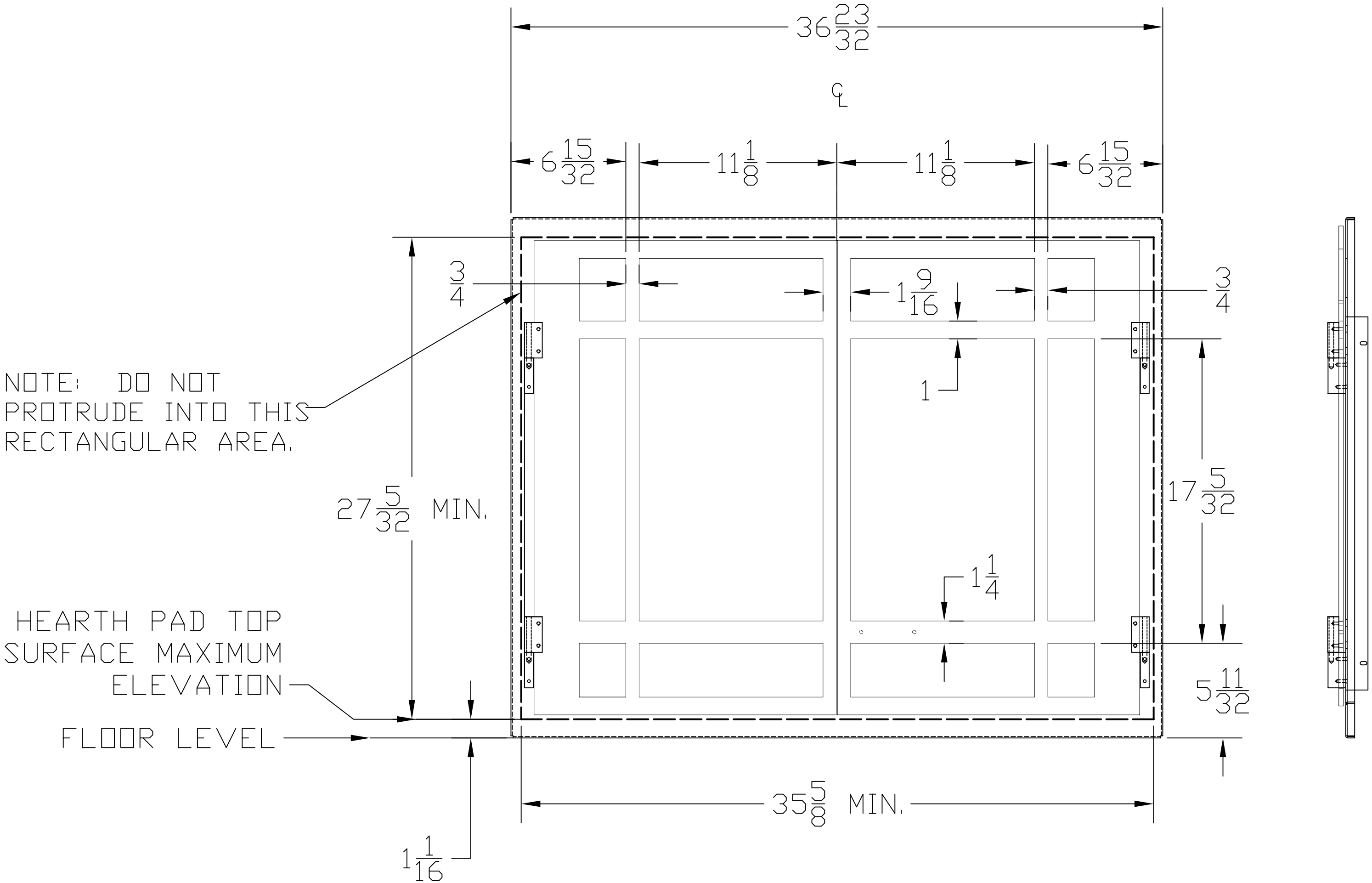DXV-35 PRAIRIE FRONT PERIMETER CLEARANCE REQUIREMENTS