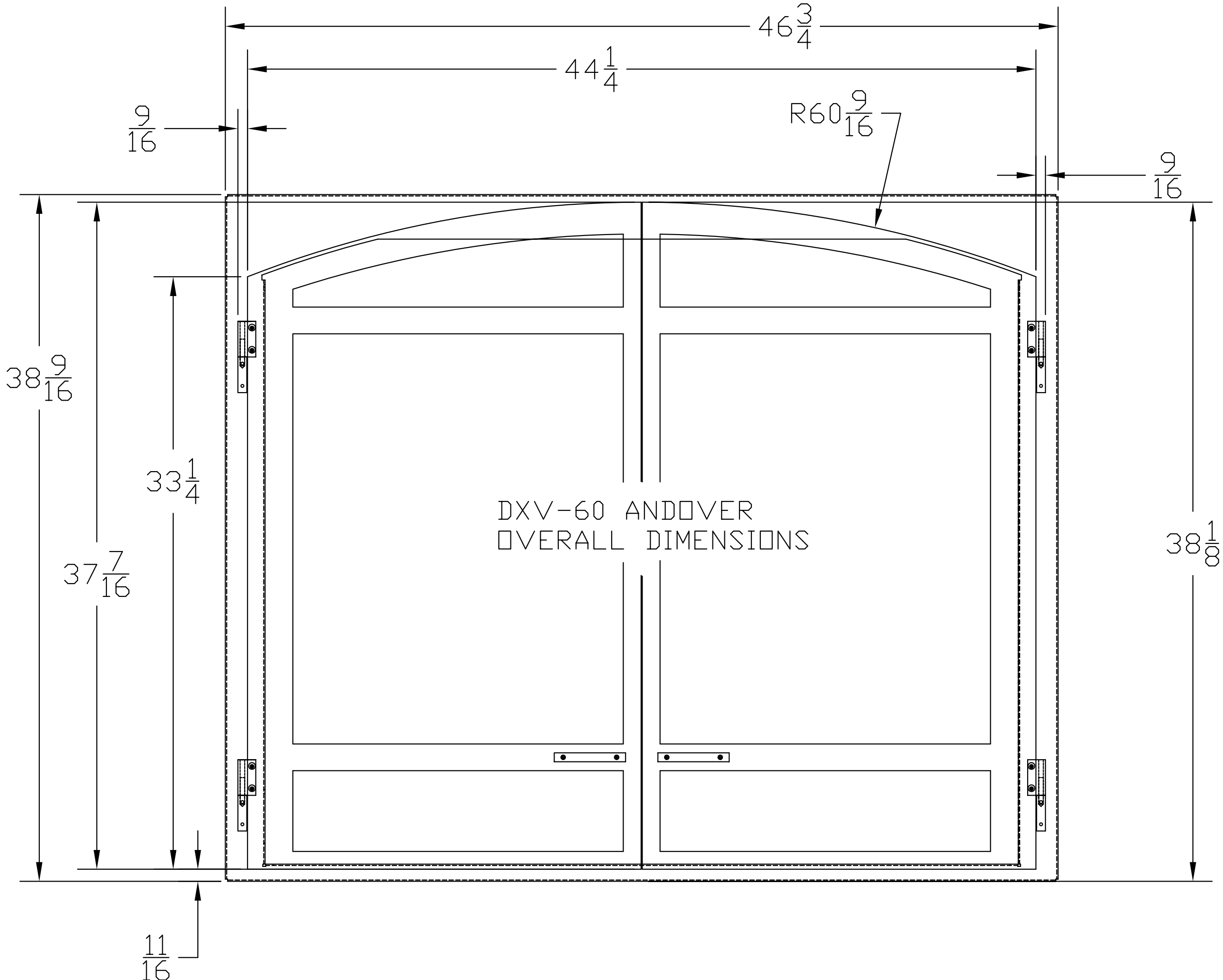

DXV-60 ANDOVER
OVERALL DIMENSIONS